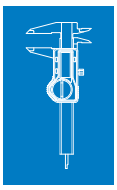

SERIES 125 VERNIER CALIPER

- With fine adjustment
- Graduation: 0.02mm/0.001"
- Meet DIN862
- Stain chrome plated reading surface
- Made of stainless steel

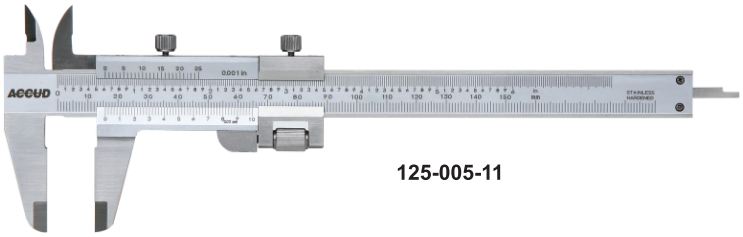

125-005-11

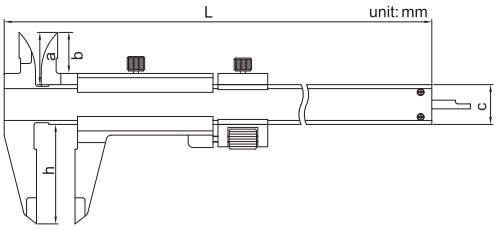

Code	Range	Accuracy	a	b	c	h	L
125-005-11	0-130mm/0-5"	±0.03mm	20.5	16.5	16	40	230
125-007-11	0-180mm/0-7"	±0.03mm	23.5	19	16	50	295
125-011-11	0-280mm/0-11"	±0.03mm	36	20	20	60	410

SERIES 122 VERNIER CALIPER

- With fine adjustment
- Made of stainless steel
- Stain chrome reading surface

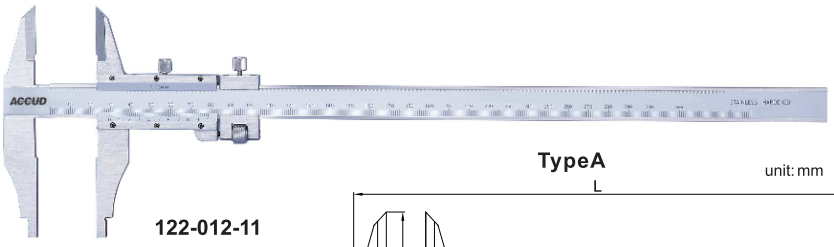

122-012-11

TypeA

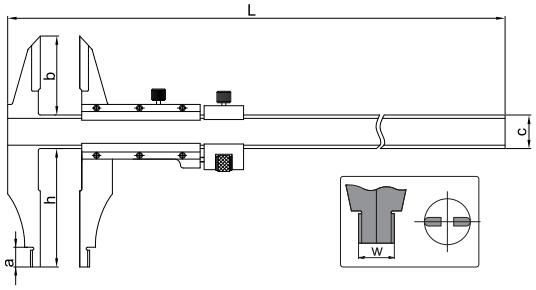

TypeB

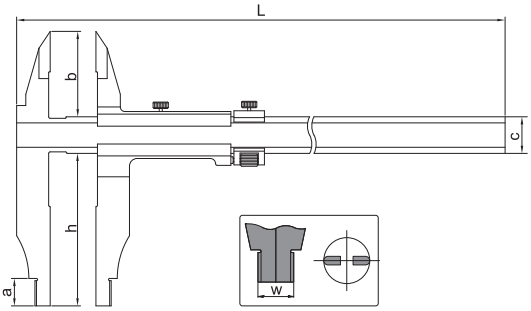

Code	Range	Graduation	Accuracy	Type	h	a	b	c	w	L
122-012-11	300mm	0.02mm	±0.03mm	A	60	10	40	17	10	410
122-012-21	300mm	0.02mm/0.001"	±0.05mm	B	90	12	40	20	10	410
122-020-21	500mm	0.02mm/0.001"	±0.05mm	B	100	18	56	24	20	670
122-020-22	500mm	0.02mm/0.001"	±0.06mm	B	150	18	56	24	20	670
122-032-21	800mm	0.02mm/0.001"	±0.07mm	B	150	24	67	31	20	1020
122-040-21	1000mm	0.02mm/0.001"	±0.08mm	B	150	24	67	31	20	1220
122-012-51	300mm	0.05mm/1/128"	±0.07mm	B	90	12	40	20	10	410
122-020-51	500mm	0.05mm/1/128"	±0.07mm	B	100	18	56	24	20	670
122-020-52	500mm	0.05mm/1/128"	±0.08mm	B	150	18	56	24	20	670
122-032-51	800mm	0.05mm/1/128"	±0.09mm	B	150	24	67	31	20	1020
122-040-51	1000mm	0.05mm/1/128"	±0.12mm	B	150	24	67	31	20	1220