SERIES 181 DIGITAL HEIGHT GAGE

- Resolution: 0.01mm/0.0005"
- Buttons: on/off, inch/mm, ABS/INC , data hold, tolerance measurement, data preset, set data
- Carbide tipped scriber
- Made of stainless steel (except the base)
- Data output(cable code: 500-01)
- With clamps (Ø8mm holder)

181-024-11

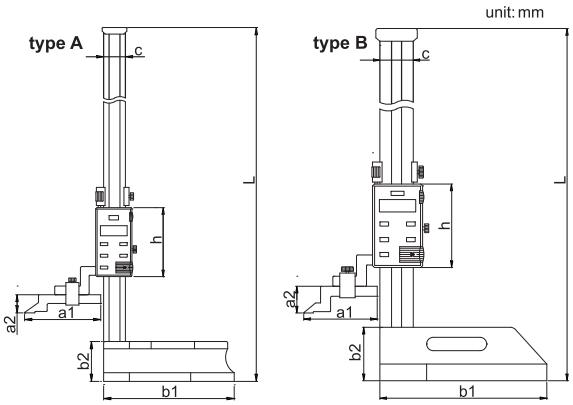

Code	Range	Type	Accuracy	a1	a2	b1	b2	c	h	L
181-012-11	0-300mm/0-12"	A	±0.04mm	76	25	135	45	23	80	470
181-024-11	0-600mm/0-24"	A	±0.05mm	103	25	180	55	30	95	820
181-040-11	0-1000mm/0-40"	B	±0.07mm	110	39	250	80	50	125	1275

clamp

SERIES 182 DIGITAL HEIGHT GAGE

- Resolution: 0.01mm/0.001"
- Buttons: on/off, inch/mm, ABS/INC , data preset, set data
- Carbide tipped scriber
- Made of stainless steel beam
- With driving wheel
- Optional accessory: 267 series clamps

182-012-11

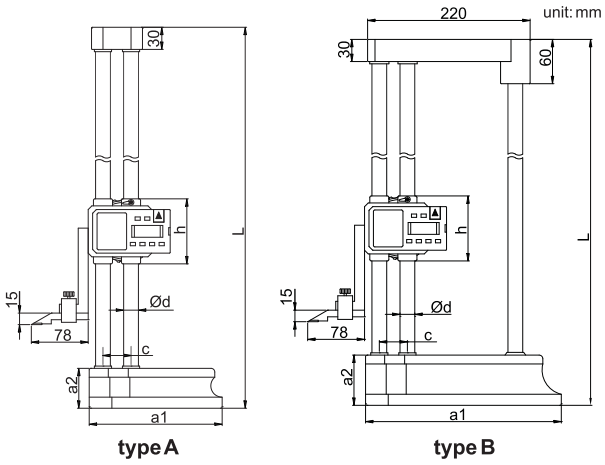

driving wheel

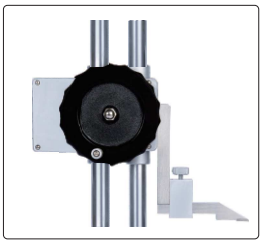

Code	Range	Type	Accuracy	a1	a2	c	Ød	h	L
182-012-11	0-300mm/0-12"	A	±0.04mm	135	43	33	15	84	475
182-024-11	0-600mm/0-24"	A	±0.05mm	180	54	38	20	88	810
182-040-11	0-1000mm/0-40"	B	±0.05mm	265	68	38	20	88	1230