DIGITAL POINT MICROMETER SERIES 317

317-001-03

- Measure the web thickness of drills, small grooves and keyways
- Resolution: 0.001mm/0.00005"
- Button: on/off/set, mm/inch/ABS
- Automatic power off
- Setting standards are included (except **317-001-03**)

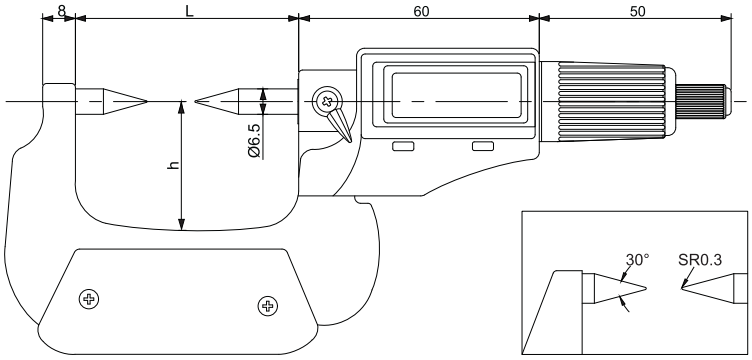

Code	Range	Accuracy	h	L
317-001-03	0-25mm/0-1"	3μm	31	55
317-002-03	25-50mm/1-2"	3μm	44	80
317-003-03	50-75mm/2-3"	4μm	58	115
317-004-03	75-100mm/3-4"	4μm	72	130

DIGITAL SPLINE MICROMETER SERIES 318

318-002-03

- Measure splined shafts, slots and keyways
- Quick measurement with lever
- Resolution: 0.001mm/0.00005"
- IP65 protection level
- Button: on/off, mm/inch, origin, ABS/zero
- Automatic power off
- Data output (cable code: 100-13)
- Carbide measuring faces
- Setting standards are included (except **318-001-03**)

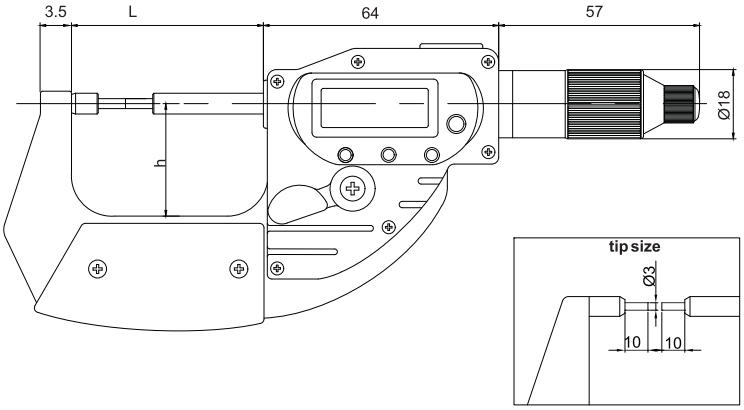

Code	Range	Accuracy	h	L
318-001-03	0-25mm/0-1"	3μm	31	55
318-002-03	25-50mm/1-2"	3μm	44	80
318-003-03	50-75mm/2-3"	4μm	58	115