231 WATERPROOF DIAL INDICATOR

- IP54 dust/waterproof
- Graduation:0.01mm
- Jeweled bearing

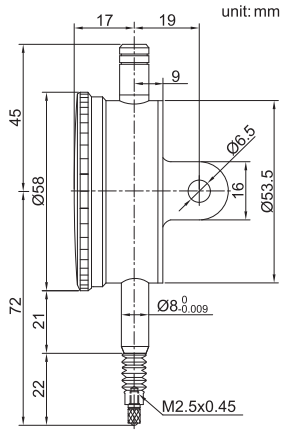

Code	Range	Accuracy(f_{ges})	Hysteresis(f_u)	Range/rev	Dial reading
231-010-11	10mm	17μm	3μm	1mm	0-100

SERIES 261 DIAL TEST INDICATOR

- Jeweled bearing
- Double scale spacing
- Anti-magnetic copper body
- With two clamps: Ø4mm and Ø8mm

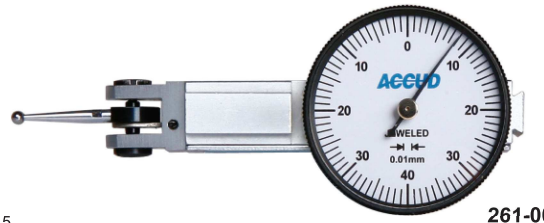

261-008-11

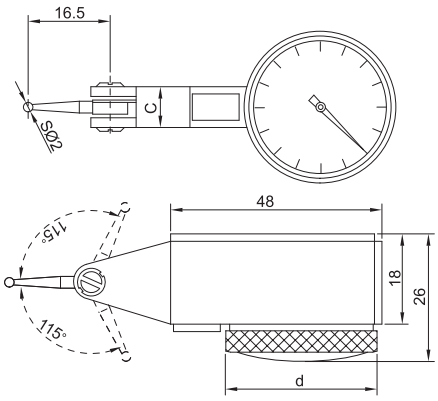

unit: mm

Clamp

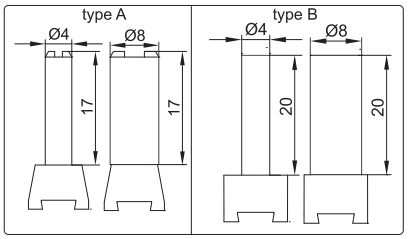

Code	Range	Bezel(d)	Graduation	Styli	Clamp	Accuracy	Hysteresis	Scale	C
261-008-11	0.8mm	Ø30mm	0.01mm	carbide	type A	13μm	3μm	0-40-0	8.9mm
261-008-12	0.8mm	Ø37.5mm	0.01mm	carbide	type A	13μm	3μm	0-40-0	8.9mm
261-002-01	0.2mm	Ø30mm	0.002mm	ruby	type B	6μm	2μm	0-100-0	8mm
261-002-02	0.2mm	Ø37.5mm	0.002mm	ruby	type B	6μm	2μm	0-100-0	8mm