THICKNESS GAUGE SERIES 441

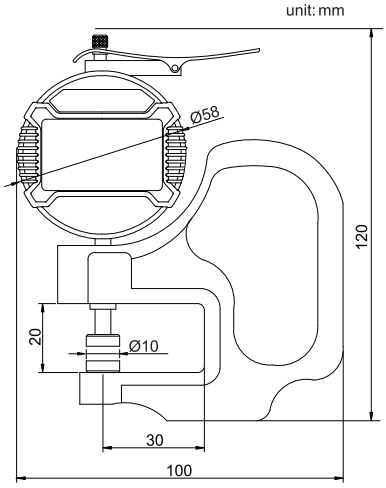

441-010-11

- Ceramic anvil
- Buttons: on/off, zero, mm/inch
- Automatic power off
- Data output (cable code: 200-01 or 200-02)

Code	Range	Resolution	Accuracy
441-010-01	0-10mm/0-0.4"	0.001mm/0.00005"	±0.005mm
441-010-11	0-10mm/0-0.4"	0.01mm/0.0005"	±0.02mm

THICKNESS GAUGE SERIES 443

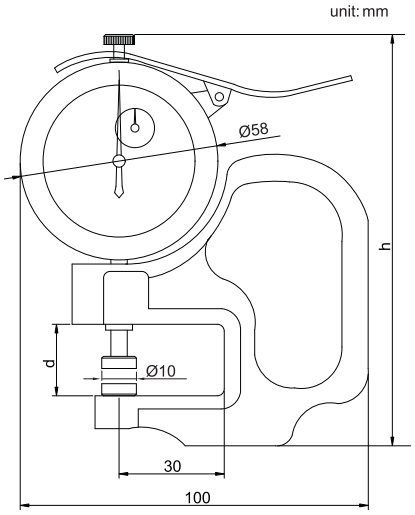

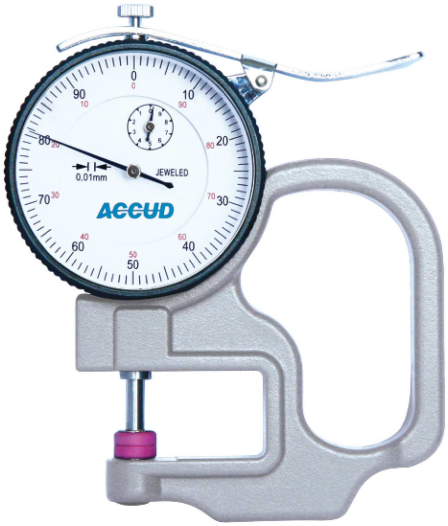

443-010-11

- Graduation: 0.01mm

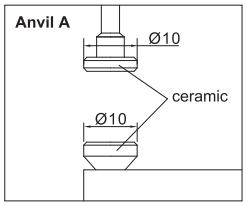

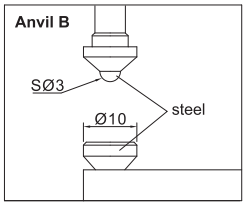

Code	Range	Accuracy	Anvil	d	h
443-010-11	0-10mm	±0.02mm	A	20	120
443-010-12	0-10mm	±0.02mm	B	20	120
443-030-11	0-30mm	±0.035mm	A	38	140