DIGITAL SNAP GAGE 433

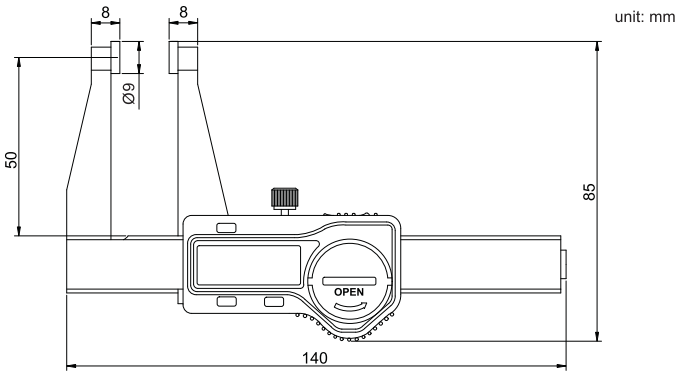

- Resolution: 0.01mm/0.0005"
- Buttons: on/off, zero, mm/inch
- Automatic power on/off
- Data output(cable code:100-11 or 100-12)
- Made of stainless steel

Code	Range	Accuracy
433-002-11	0-50mm/0-2"	±0.03mm

DIGITAL 3-PURPOSE SNAP GAUGE 436

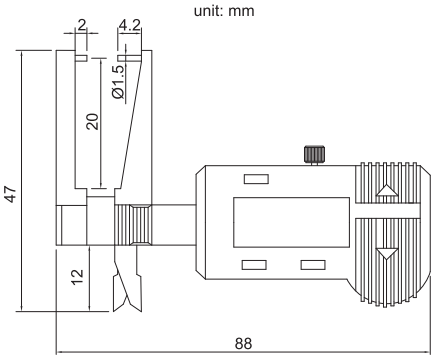

- Buttons: zero, mm/inch, on/off
- Battery SR44 or LR44
- Made of stainless steel

Code	Range	Accuracy	Resolution
436-001-11	0-25mm/0-1"	±0.03mm	0.01mm/0.0005"