COMBINATION SQUARE SET 817

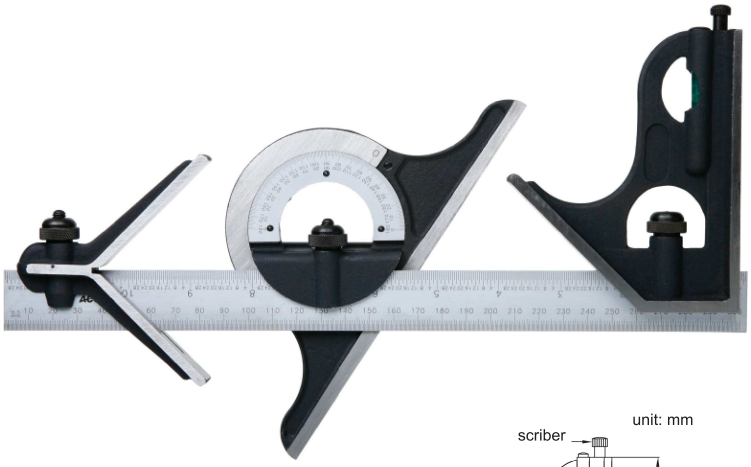

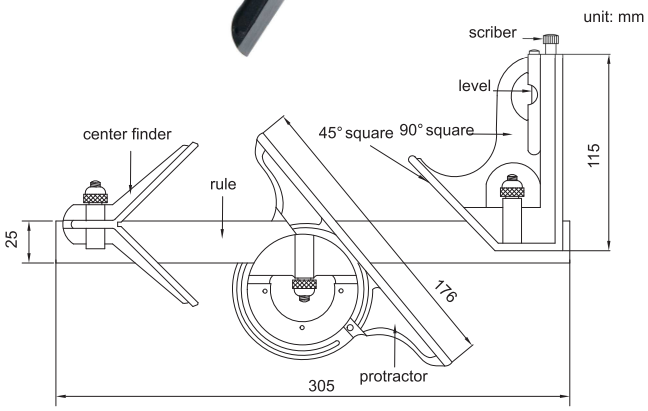

- Protractor:
  Used to set an angle or angle measurement,
  measuring range: 0-180°, accuracy: ±7'
- Square:
  Used as 90° square or 45° square
  accuracy of 90° square: ±8',
  accuracy of 45° square: ±10'
- Rule:
  Used as rule , measuring range: 300mm/12"
- Center finder:
  Used to find the cylinder center,
  accuracy: ±0.15mm

Code
817-180-02

L

DIGITAL PROTRACTOR SERIES 821

821-008-01

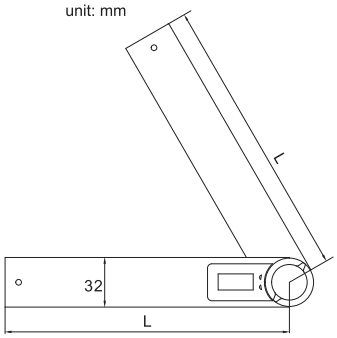

- Resolution: 0.1°
- Buttons: on/off, zero
- With locking attachment
- Rule graduation: 1mm and 1/32"
- Auto power off

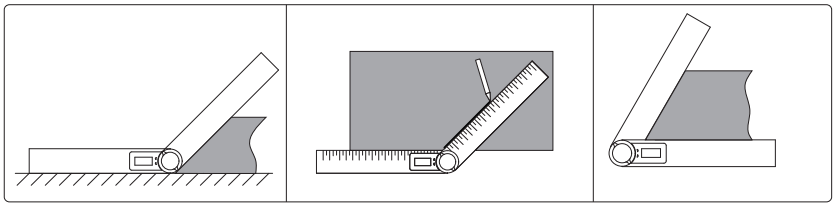

Code	Size(L)	Range	Accuracy
821-008-01	200mm	0 - 360°	±0.3°
821-012-01	300mm	0 - 360°	±0.3°